LIGHTING TODAY AND TOMORROW

Leslie (Les) Pace, CEM, CDSM, CSDP, LC, CLEP

Serving K-12 since 1970

BASIC

Lighting is at the core of building energy services. It profoundly affects the way people feel, work, and interact. It uses large amounts of energy – about 1/5th of U.S. electricity - but offers potentially vast savings that in turn can cut the capital and operating costs of other building systems.

LIGHTING IS THE KEY TO EFFICIENT BUILDING DESIGN.

TASK LIGHTING

People don't want light for its own sake; they want what it provides …

- Vision
- Beauty
- Comfort
- Economics
- Esthetics

BEYOND EFFICIENCY

- Energy costs are important
- Salaries much larger
- Health
- Productivity
- Maintenance

LIGHTING COMPLEXITY

Lighting is a comprehensive complex system. One must consider …

- Interactions of daylighting
- Age of occupants
- Tasks being performed
- Effects on the eye
- Photopic and Scotopic

THINK SYSTEMS

- Fixtures
- Lens
- Lamps
- Ballasts
- Kelvin temperature of the lamp
- Reflectors
- Energy use

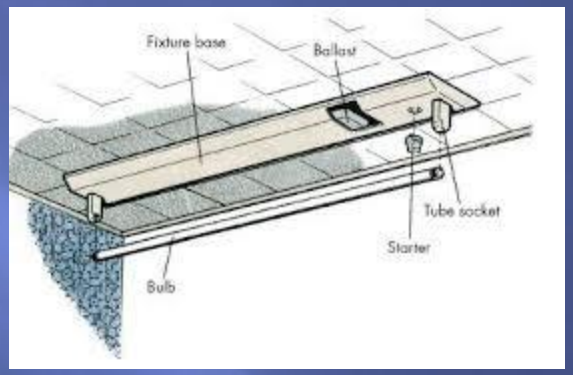

STAY UP TO DATE

- Which bulb, T-8, T-10, T-12, CFL, Biax, or LED? Why??
- How about LED ??
- HOW about INDUCTION ??

DEEPER STUDY

TASK LIGHTING

Different tasks require different amounts and types of illumination.

- Light levels
- Color rendering
- Glare
- Light source distraction
- Safety

HOW MUCH LIGHT?

- Foot candles (Photopic)
- Scotopic, effects on the rods and cones of the eye, how well do we see.
- IES standards or power density factors
- Fixture location
- Lighting controls

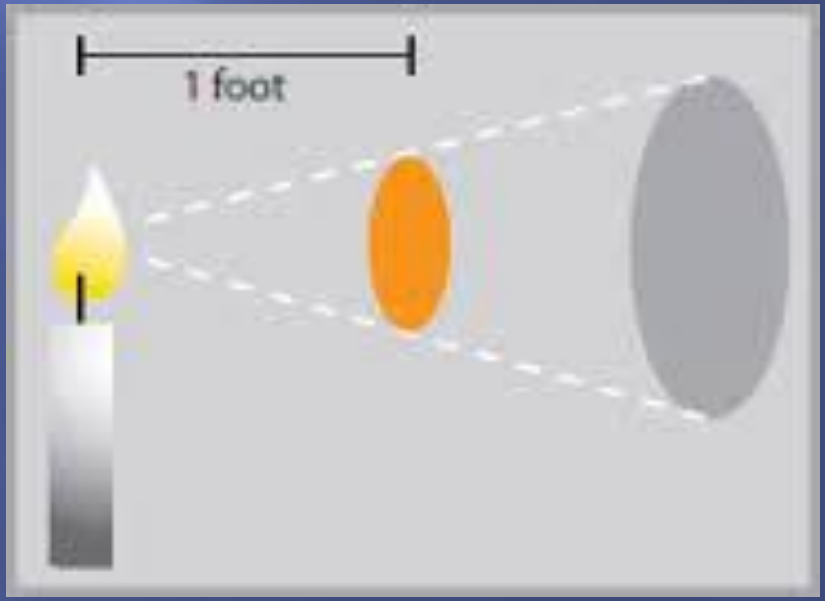

COMPACT FLUORESCENT

What wattage to use? Compact fluorescent light (CFL) as compared to incandescent emits a little more than 4 times the light of an incandescent, so a 30 watt CFL will replace a 100 watt incandescent lamp quite easily.

- 2700K = incandescent
- 3,000K = warm
- 5,000K = cool

DESIGN

Lighting is an art as well as a science. Efficient lighting can and should be beautiful too. It feeds esthetics, emotional, and spiritual as well as economic and functional appetites.

THE EYE

The eye is more sensitive to contrast and differences in luminance than to absolute light levels, so good lighting design controls variations in luminance.

DON'T confuse requirements for ambient lighting with the light needed for a task. Keep ambient lighting low and task lighting to a recommended level.

COLOR RENDERING INDEX

BEWARE!

Color rendering is not a single decision making factor for illumination. Kelvin temperature gives visual effects, and combined with the proper color rendering light source, provides the best visual environment.

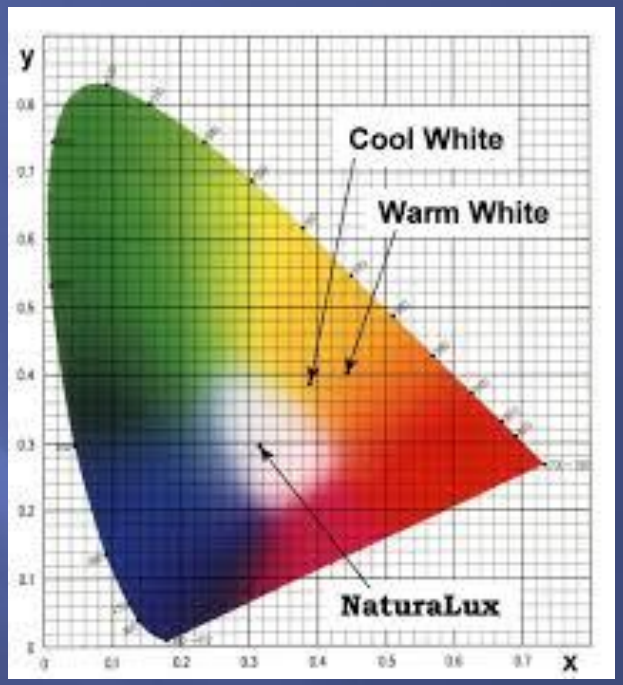

Weigh all factors.

RATED LAMP LIFE

Average rated lamp life is the median value of a group of lamps, determined when 50% of the lamps have failed, or are still operating based on:

- Fluorescent - 3 hours on 20 minutes off cycle.
- HID - 10 hours on, one hour off cycle.

- LED - continuous burn

TYPICAL OPERATING TIMES

Educational / HS	2650 hours
Educational / MS	2300 hours
Educational / ES	2100 hours
Office	2730 hours
Food service	4580 hours
Warehouse	3295 hours

LIGHTING POWER DENSITY

ASHRAE / IES 90.1 VALUES

Watts per Sq. Ft. as of 2003

Educational	1.2	Retail	1.5
Warehouse	0.8	Offices	1.0

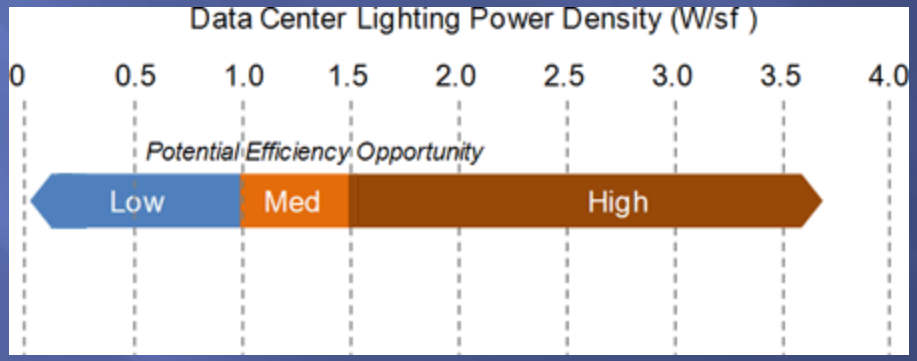

RETROFITS

Existing system: 4 lamp T-12 with two magnetic ballast

- Replace all lamps with new and measure light levels.
- Assume the light levels are above the needs because maintained lumens were calculated and used as the corrected light levels required

- Option: replace existing lamps with 34 watt T-12 lamps Result: less light, lower energy use.
- Option: Replace lamps and ballasts, using T-8 lamps and one 4 lamp ballast.

- Result: same light level, less energy consumption, better color rendering, no lamp flicker, and lower maintenance cost.

RETROFITS

- Replace all four lamps with two T-10 lamps.
- Result: large energy savings, some reduction in light level, better color rendering and visual environment, lower maintenance cost. Further savings can be accomplished by replacing the ballast with an electronic solid state and eliminate flicker.

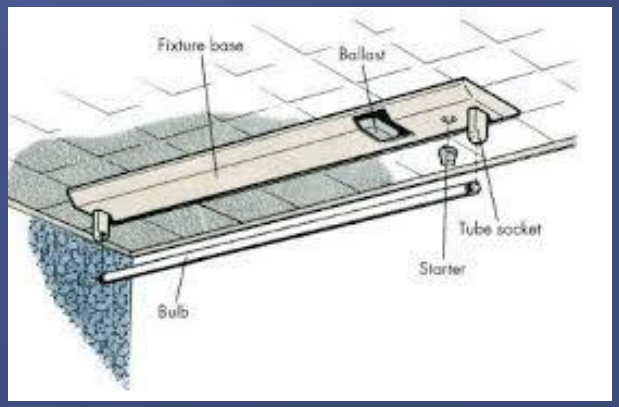

Retrofits

Or, just replace all four T-12 lamps with three T-10 lamps and produce more light, color corrected, and improved environment, IF more light is needed.

Weigh the facts, evaluate the need for lighting, and prescribe. Remember, the old lighting system may not have been proper to begin with, or the task has changed.

TYPICAL LIGHT LEVELS

- Parking lot 2 FC
- Hallways 10 FC
- Factory floor 30 FC
- Offices 40 to 50 FC
- Classrooms 40 to 50 FC
- Gym HS 75-100 FC
- Food Inspection 100 FC
- Operating room 1,000 FC no glare

SUCCESSFUL LIGHTING APPLICATIONS

- Required light level
- Fixture efficiency
- Lumen output of lamps and fixtures
- Color rendering index (CRI)
- Color Temperature (Kelvin)
- Types of light sources
- Light quality
- The human factor

TAKE A BREATH

NOT AS COMPLICATED AS IT SEEMS

Remember, eating an elephant can only be done one bite at a time.

REMARKS

Keep in mind that all recommendations for light levels have been based on what has been believed to be the best light levels. Today, as we move into more scientific evaluations of our visual environment, we realize that more light is not always the best visual effect. We now must be concerned about how well we can see.

New Lighting Technology

LED lighting is a whole different source of light.

Requirements in a classroom:

- 5000 Kelvin
- Scotopic rating of 1.90 plus
- Cannot use foot candle meter, as it does not respond to LED source lighting. To factor light levels use the lumen calculations.

Lumen Calculation

Putting the Software to Work for Your Space		
Calculation Needed	**Lumen Method**	**Lighting Analysis Software**
Average illumination (footcandles) empty room, uniform lighting	Yes	Yes
Average illumination (footcandles) empty room, non-uniform lighting	Approximated	Yes
Average illumination (footcandles) room with objects	Approximated	Yes
Minimum illumination in room (any point)	No	Yes
Maximum illumination in room (any point)	No	Yes
Vertical illumination on walls	No	Yes
Vertical illumination on objects in room	No	Yes

FACTS

- 45% OF THE ERRORS ON SAT exams were the result of poor lighting, (visual perception)
- Reading scores can be improved by 35% with the correct lighting.
- Students were 75% less restless under the proper light.

These statistics are from extensive testing in real life classrooms in the US and UK over a 7 year period.

Summary

- Time to stop assuming — open your minds and engage students in learning the new technologies in our everyday environment
- Explore applications of new technologies
- Evaluate them
- Put the math into the application to determine if economically feasible

In other words, S.T.E.M. is easily applied with the PLT Green Schools Investigations.

Questions

Technical information and more is available to you through the OK Green Schools / PLT programs. Just ask …

Info@OKGreenSchools.org